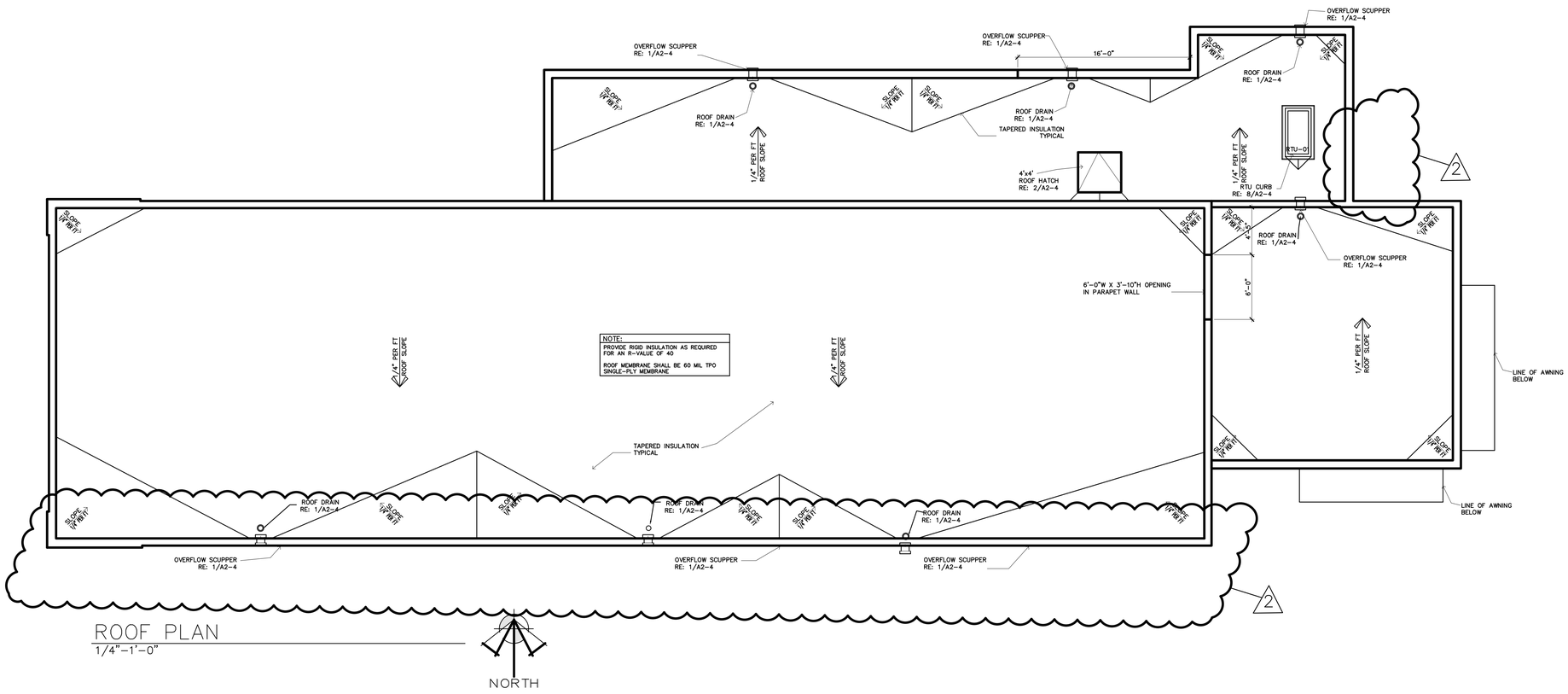

ROOF PLAN
1/4"=1'-0"

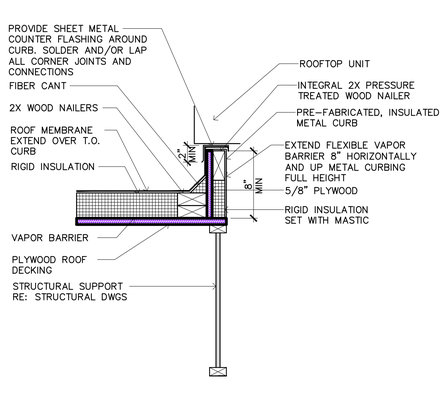

8 HVAC UNIT CURB DETAIL
1 1/2" = 1'-0"

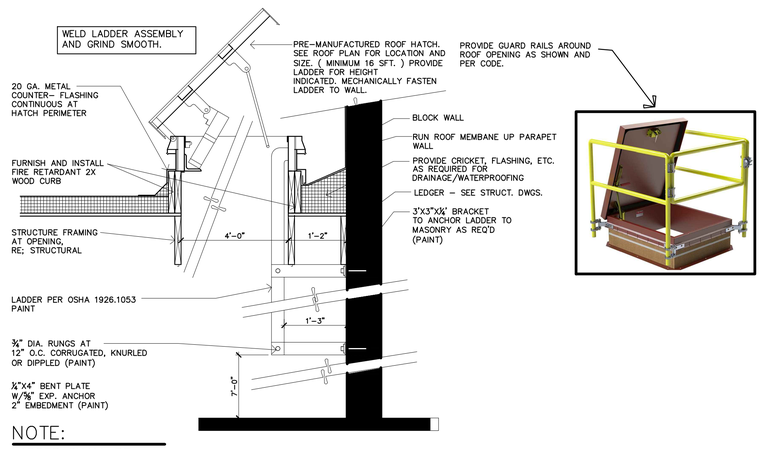

NOTE:
LADDER SHALL BE
18" WIDE

2 ROOF HATCH DETAIL
3/4' = 1'-0"

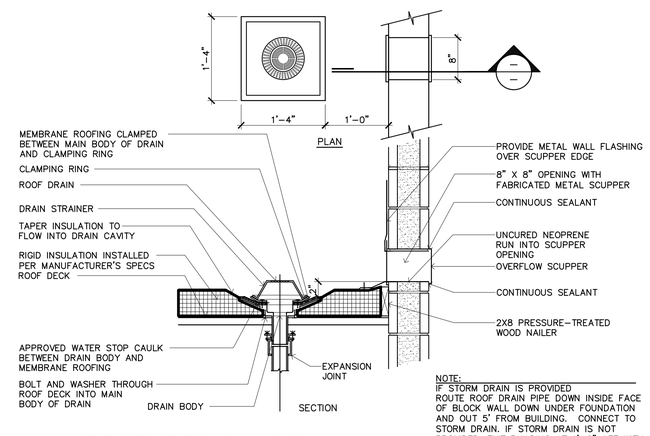

NOTE:
IF STORM DRAIN IS PROVIDED
ROUTE ROOF DRAIN PIPE DOWN INSIDE FACE
OF BLOCK WALL DOWN UNDER FOUNDATION
AND OUT 5' FROM BUILDING. CONNECT TO
STORM DRAIN. IF STORM DRAIN IS NOT
PROVIDED, EXIT BUILDING AT 1'-0" AFF WITH
LAMB'S TOOTH SPOUT.

1 ROOF DRAIN AND OVERFLOW SCUPPER DETAIL
1 1/2" = 1'-0"

BRAKES PLUS

APPROX. WEST 101ST PLACE & SOUTH ELM STREET
JENKS, OKLAHOMA

STATE OF OKLAHOMA
NORMAN L. HERMAN
No. 2737
Littleton, Colorado
LICENSED ARCHITECT
7.24.26

ARCHITECT OF RECORD

REVISION	DATE	COMMENTS
	06.18.26	SUBMITTED TO BLDG. DEPT.
	07.24.26	ISSUED FOR CONSTRUTION
2	08-14-26	ADDENDUM 2

ARCODEV JOB #: –
CLIENTJOB #: –
DRAWN BY: NLH
CHECKED BY: NLH
DATE OF ISSUE: 04.09.26

ARCODEV
45 SPYGLASS DRIVE
LITTLETON, CO 80123
VOICE: 303.881-8925

SHEET

A2-4

ROOF PLAN